TAKUMI When Precision Matters

TAKUMI

HMX Series

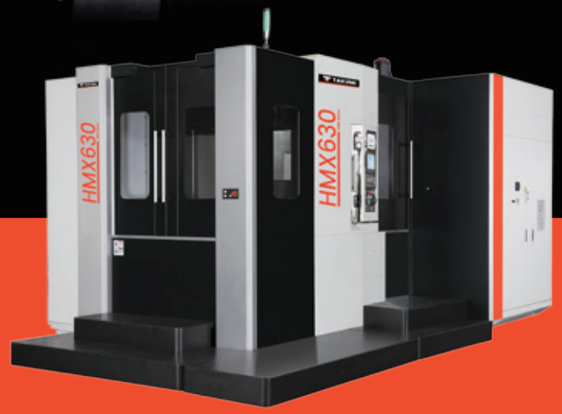

TAKUMI

No.10, Gong 10th Rd., Dajia Distr., Taichung City 437, Taiwan
T +886 4 26811215
F +886 4 26822803
sales-os@takumi.com.tw
www.takumi.com.tw

HURCO COMPANIES, INC.

HMX630-01-EN-202207

The new high-speed, high productivity horizontal machining center

- HMX 630

CONTENTS

02 **Product Preview**

Basic Information

03 Basic Structure
05 Body Structure
07 Spindle
09 Feed Axes
11 Automatic Tool Change
13 APC & Pallet

Machine Information

17 User Convenience
19 Diagrams
21 Machine Specification



High rigidity one-piece bed

HMX series are designed with one-piece bed structure with dual wall design on X-axis column and stepped traveling column.



High speed

Best-in-class rapid traverse rate of 50m/min provides maximum productivity.

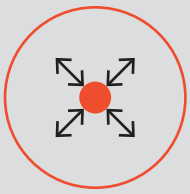

Excellent extendibility

Superior pallets extension and diverse tool changer provide user with maximized productivity and rapid installation.

HMX Series

The HMX series exceeds all of your expectations as it provides high speed, high performance and maximum productivity.

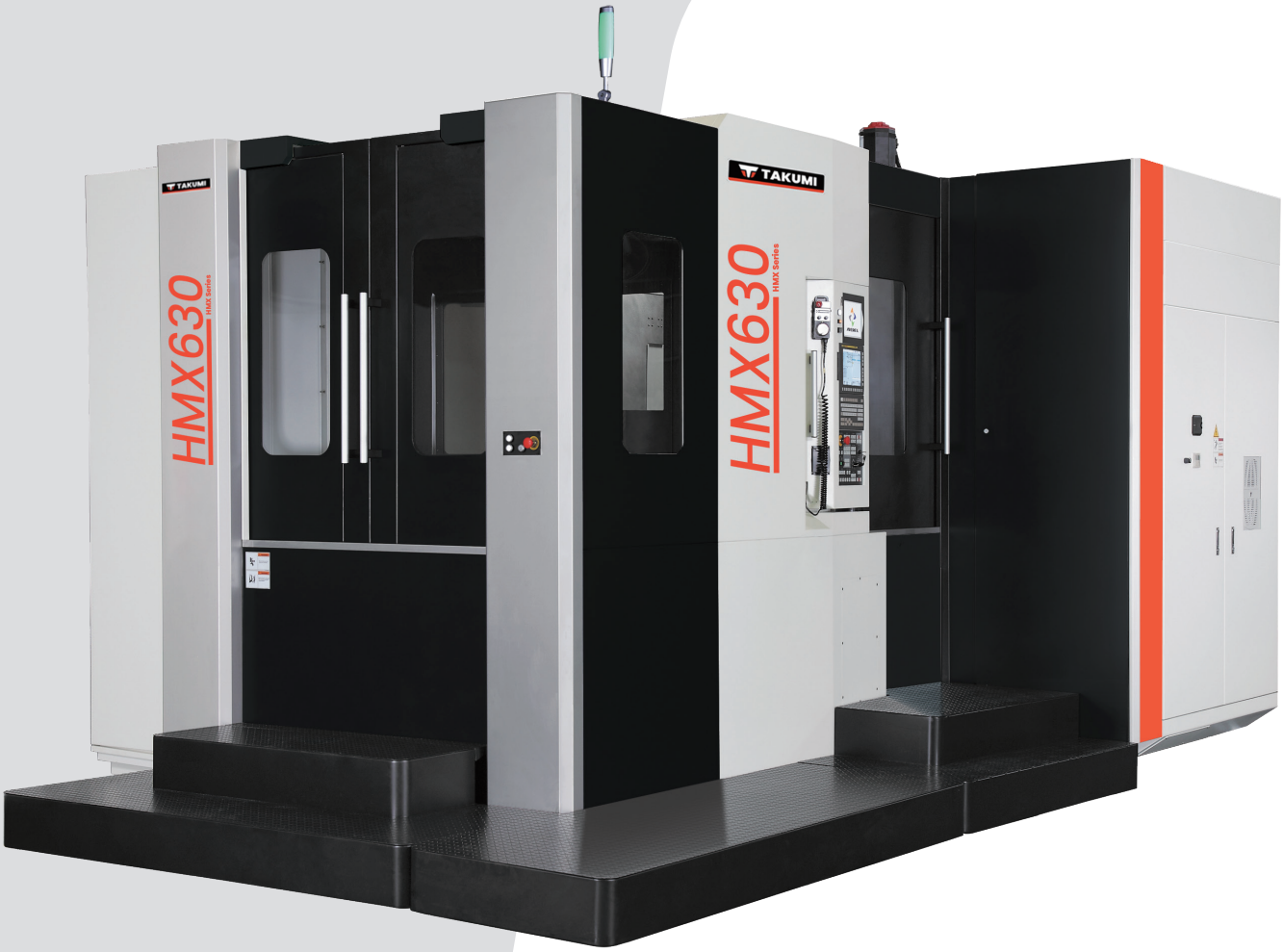

Basic Structure



01 One-piece bed structure

High rigidity one-piece bed providing excellent stability. With stepped-guide bed structure, travel stability is increased by column weight optimization.

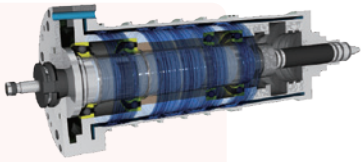

02 Superior thermal stability

High precision is achieved by ceramic ball bearings. Heat shielding and oil cooler system is designed for minimize thermal impact.

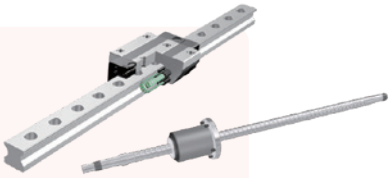

03 High speed, stable axis structure

The HMX series are equipped with roller type LM guideway providing fast acceleration and high precision ballscrews.

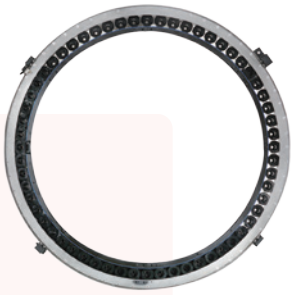

04 ATC and magazine

2.5 second tool change time (T-T) is realized by servo motors. 60 tools are provided as standard, in addition to various options.

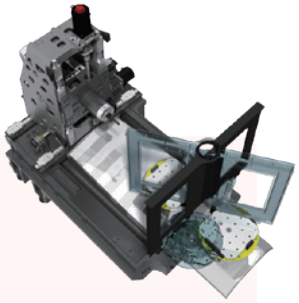

05 APC system and pallet

The HMX series provides flexibility with 6 pallet APC as option. Servo driven APC guarantees fast and precise pallet change.

HMX Series

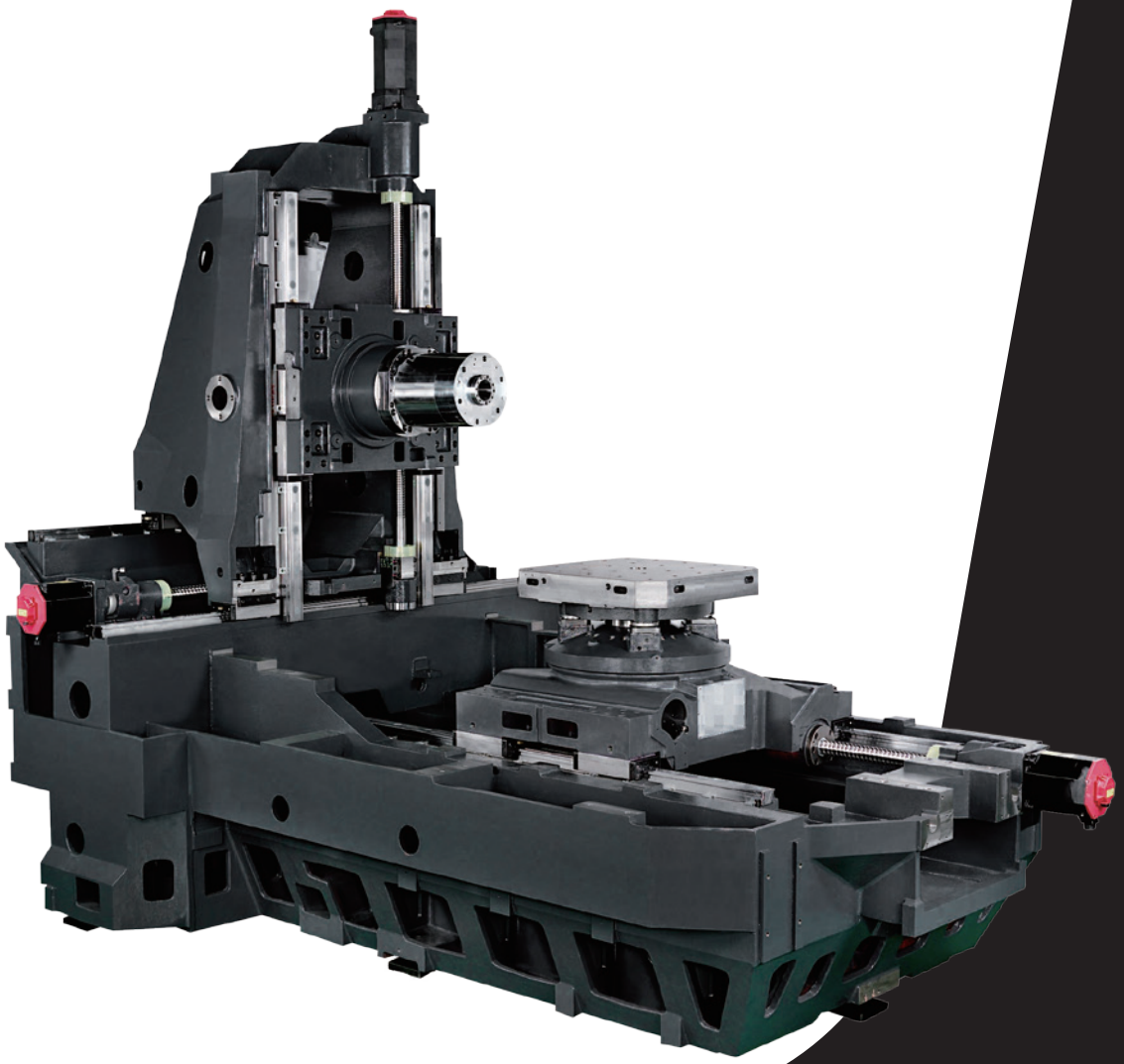

50/50/50
m/min Rapid traverse (X/Y/Z-axis)

1050/900/1020
mm Travel (X/Y/Z-axis)

630 x 630
mm Table size

0.7G/1.0G/0.9G
Feed axis acceleration/deceleration (X/Y/Z-axis)

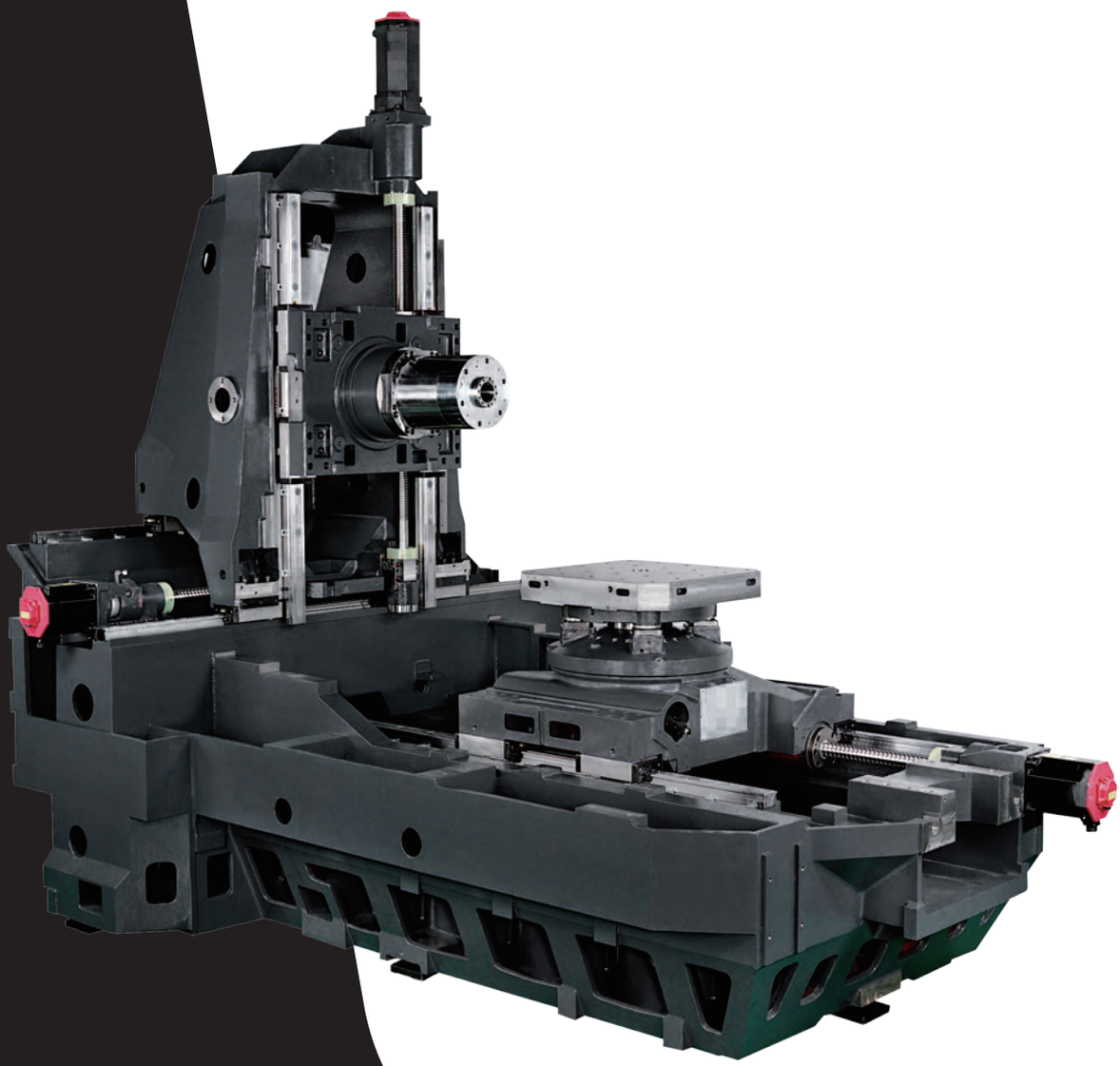

01 HMX Series Body Structure

Optimal body structure design is the foundation of machining perfection

High rigidity one-piece bed

Integrated bed frame ensures high rigidity and excellent vibration absorption compare with separate structure providing excellent surface finishes.

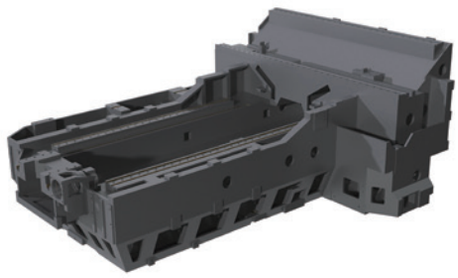

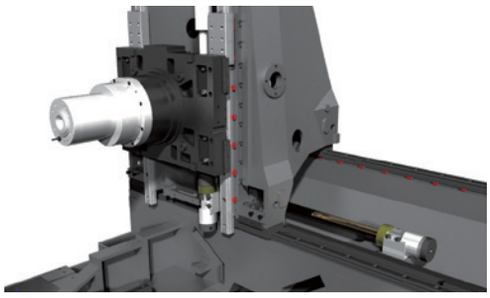

Stepped-guide bed structure

With the support of step structure design, high stability is guaranteed while accelerating and decelerating.

Dual-wall machine column

Structure of the machine column is dual-wall and symmetrical designed to eliminate thermal deformation. It maintains geometrical precision during prolonged operation.

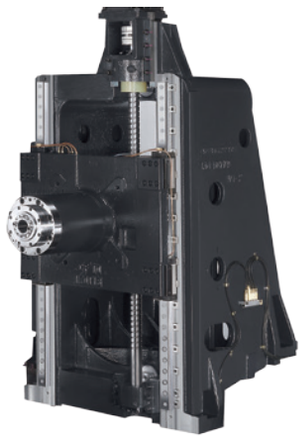



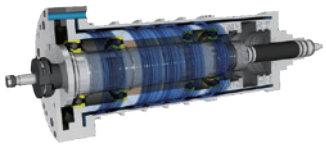

High precision ceramic ball bearing

Higher bearing stiffness, reduced thermal expansion and lower vibration excitation allows maximum machining accuracy.

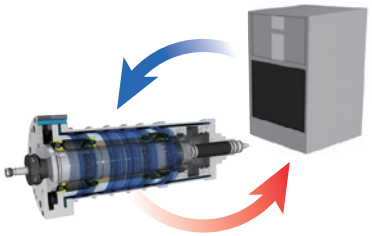

Spindle cooling system

Spindle temperature is constantly controlled by oil chiller which minimizes thermal displacement during continuous operation at high speed.

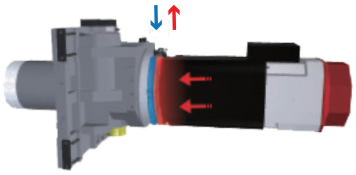

Cooled spindle motor seat

The motor seat is equipped with a cooling design that isolates the heat generated by the spindle motor and reduces thermal displacement.

02 HMX Series Spindle

Spindle Power - Torque Curve

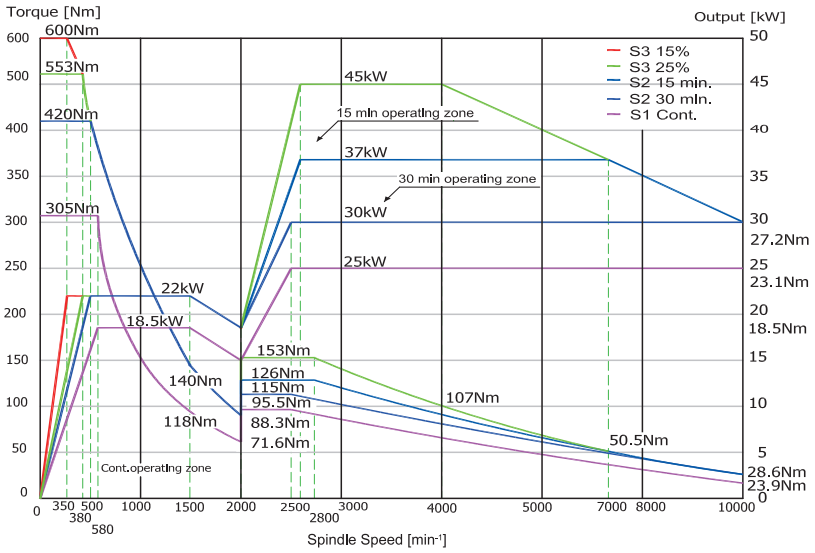

10,000rpm Direct drive spindle (ST)

25/45 kW Power (Cont./S3-25%)

420/600 N.m Torque (15min/S3-15%)

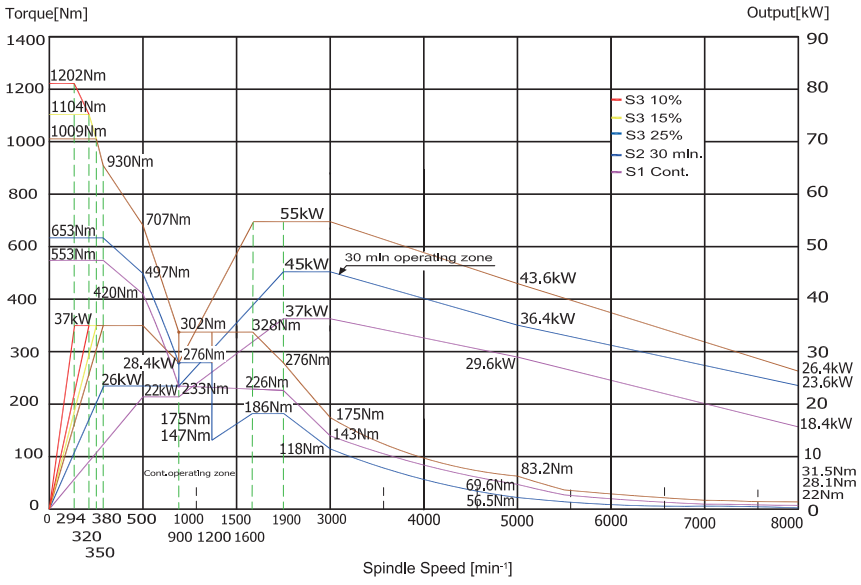

8,000rpm Direct drive spindle (OP)

37/55 kW Power (Cont./S3-25%)

553/1202 N.m Torque (Cont./S3-10%)



03 HMX Series Feed Axes

Roller-type LM guideway

All axes are equipped with LM roller guideway. It features higher load capacity and greater rigidity even at high acceleration.

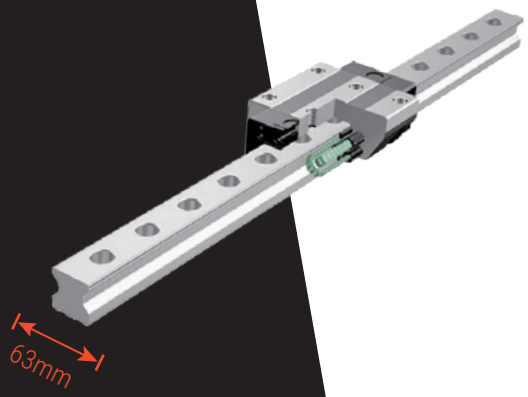

HMX630

50/50/50

m/min Rapid traverse rate (X/Y/Z-axis)

TSUBAKI high precision ball screw

HMX series are equipped with high precision ball screws featuring high load capacity while also providing high durability and rigidity. Oversize Ø50 mm ballscrews provide rigidity and accuracy during heavy cutting.

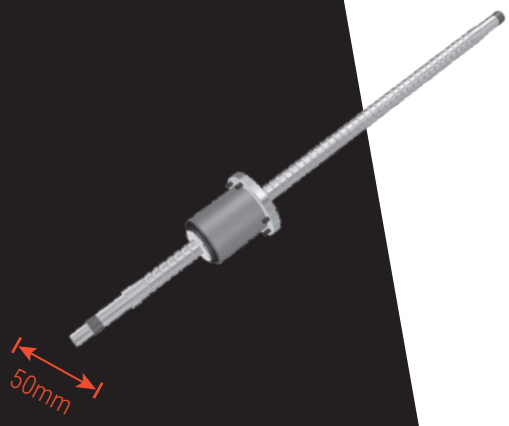

HMX630

0.7G/1G/0.9G

Feed axis acceleration/deceleration (X/Y/Z-axis)

Thermal stability on ballscrews, bearings and Y-axis motor seat

Precision of the drive systems are achieved by using core-cooled ballscrew (TSUBAKI®). Speed and accuracy are enhanced with the cooled servo motor seat, ballscrew nut and bearings which minimizes thermal error of ballscrews.



04 HMX Series Automatic Tool Changer

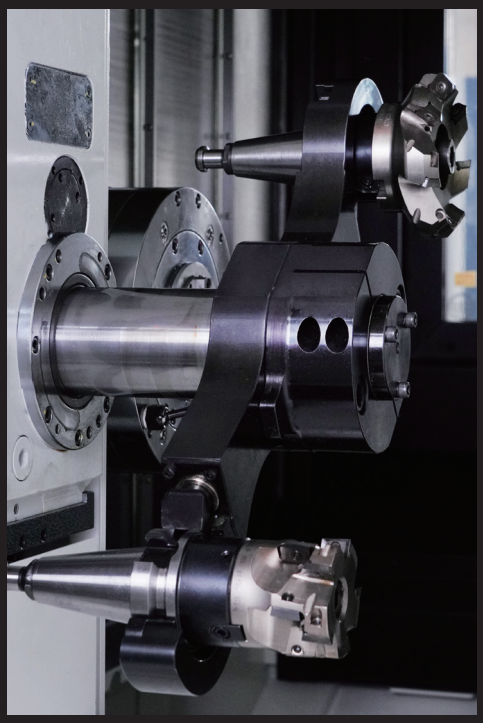

ATC

The servo driven ATC ensures fast and reliable tool change. Tool change time is optimized to reduce non-cutting time. Diverse solution is tailored to your need and realized by programmable ATC speed. Lower speed is for heavy tools, special over size boring tools and probe for workpiece measurement.

HMX630

2.5 sec
Tool change time (T-T)
Tool to tool time

5.8 sec
Tool change time (C-C)
Chip to chip time



HMX630 tool storage capacity

The tool magazine can store up to 60 tools as standard and up to maximum 120 as option. Servo driven magazine ensures fast and reliable tool indexing. Magazine indexing is also available at high/low speed.

Superior cutting performance

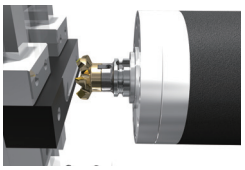

HMX630

	Face milling		
Removal rate	4,800cc/min	272cc/min	810cc/min
Material	Aluminum 6061	Steel (S45C)	Steel (S45C)
Spindle speed	10,000rpm	320rpm	675rpm
Tool diameter	Φ100mm x 7T	Φ160mm x 8T	Φ125mm x 8T
Feed rate	12,000mm/min	256mm/min	3,240mm/min
Cut width/depth	80mm/ 5.0mm	125mm/ 8.5mm	100mm/ 2.5mm



	Rigid tapping		Drilling
Material	Steel (S45C)		Steel (S45C)
Spindle speed	58rpm		750rpm
Tool diameter	M56 x 5.5P		Φ80mm x 2T
Feed rate	319mm/min		188.4mm/min

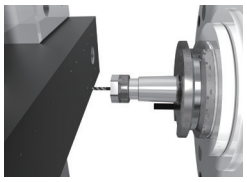

Tool specifications

With adjacent tool(s) max. tool diameter

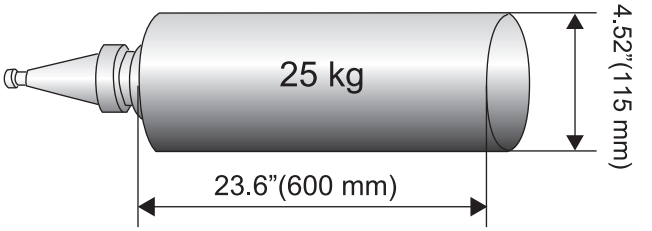

Without adjacent tool(s) max. tool diameter

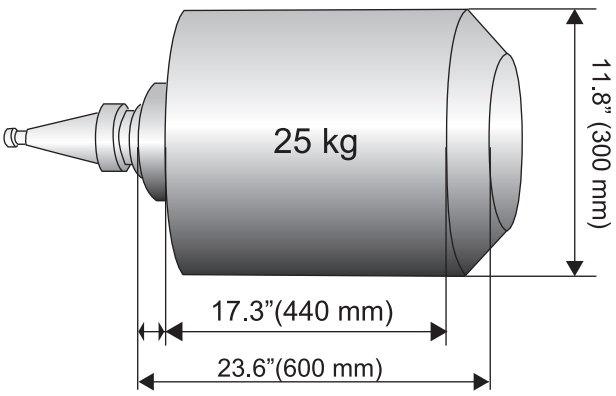

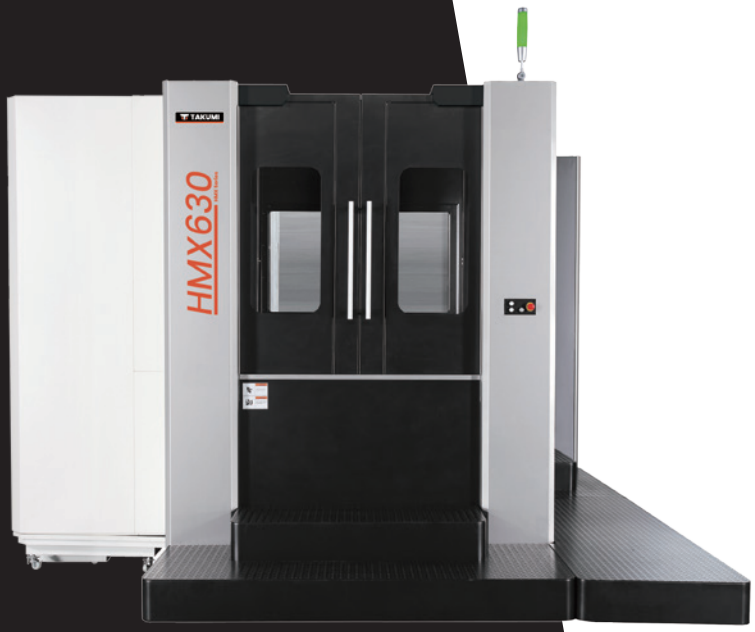

High accuracy pallet clamping system

Repeated accuracy of 3μm is achieved by 4 cones. System is equipped with air blower to remove chips from the seating surface.

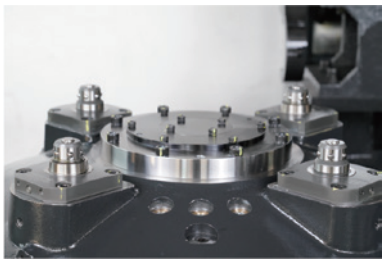

In addition, the pallet clamping system is equipped with air sensors that ensures the pallet is securely seated and accurately positioned.

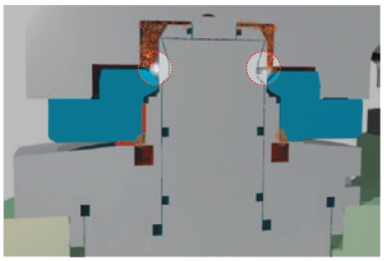

Pallets are mechanically clamped by a ball locking system which generates a powerful 6,400kgf clamping force.

05 HMX Series APC & Pallet

High speed servo driven APC system

Thanks to the servo driven APC, it provides fast and accurate pallet change to achieve high productivity.

The HMX series are as flexible as needed for two different size tables, which can be installed in one machine.

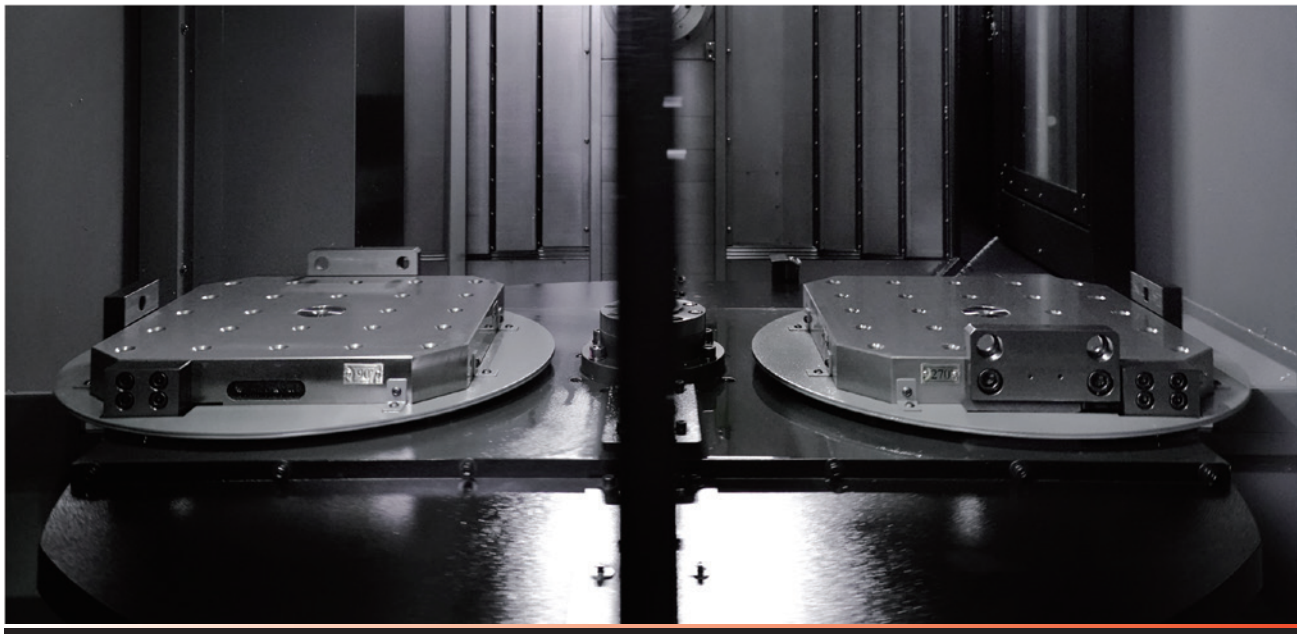

15 sec Pallet changing time

1200 kg Max. payload/each pallet

630×630 mm Table size

Pallet changing time

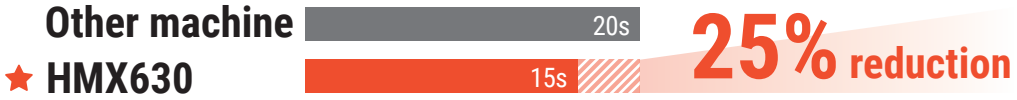

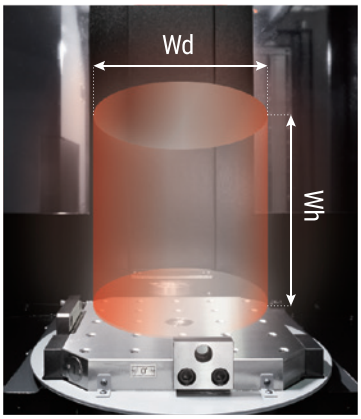

Maximum workpiece size

Maximum workpiece size (Wd x Wh)

HMX630	Φ 1000 x 1300mm

Maximum workpiece weight

HMX630	1200kg

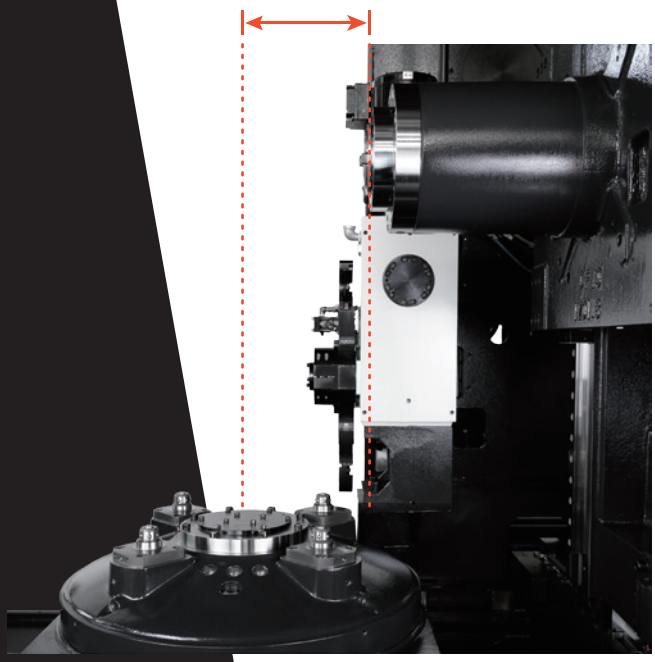

Rigid cutting with shorter tool

The distance between spindle nose to the center of the pallet is minimized to 50mm. With this design, tool rigidity for heavy-duty machining can be increased. In addition, Z-axis displacement at high speed cutting will be minimized.

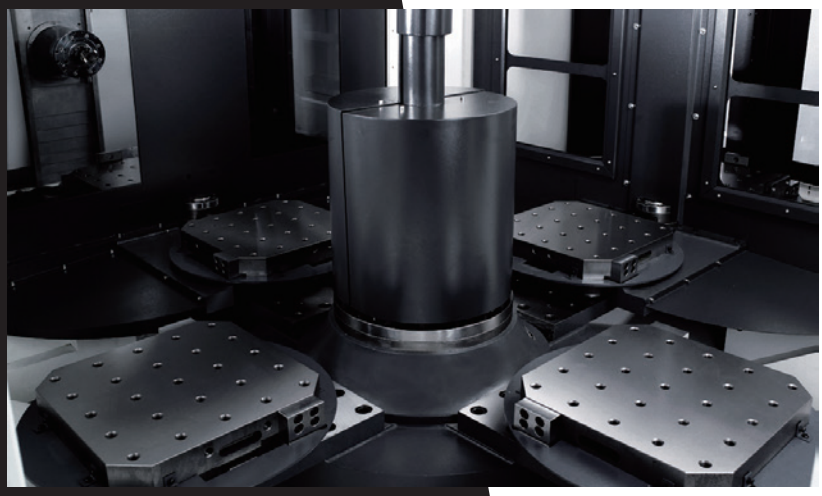

One-piece casting APC system option

The base of 6 APC expansion unit is made of integrated one-piece casting, providing superior stability and rigidity.



1° standard / 0.001 ° option

B-axes indexing angle

High precision indexing

1° index table as standard and 0.001 ° as option apply high precision coupling for accurate indexing.

Flexible APC systems option

HMX offers 2 pallets as standard and flexible APC 6-station pallet pool as option. The system is design for small quantity batch production under a scheduled operation, achieving the optimal productivity.



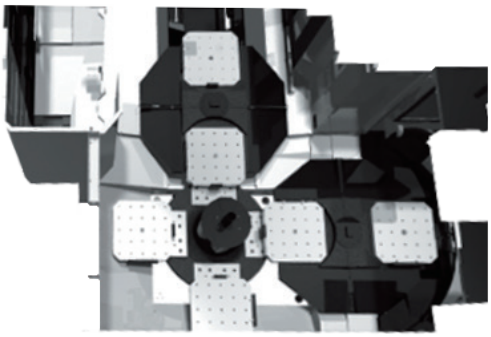

APC system achieves higher accuracy and minimizes the heat with a servo motor driven rotatory index.

Identification system is integrated in each APC 6-station pallet. Each pallet can call its own part program, work coordinates and tool offsets. Up to 99 identification numbers can be set up, providing a high level of automation.

APC & Pallet

The HMX series are built ergonomically for operators, simple operating and uncomplicated maintenance.

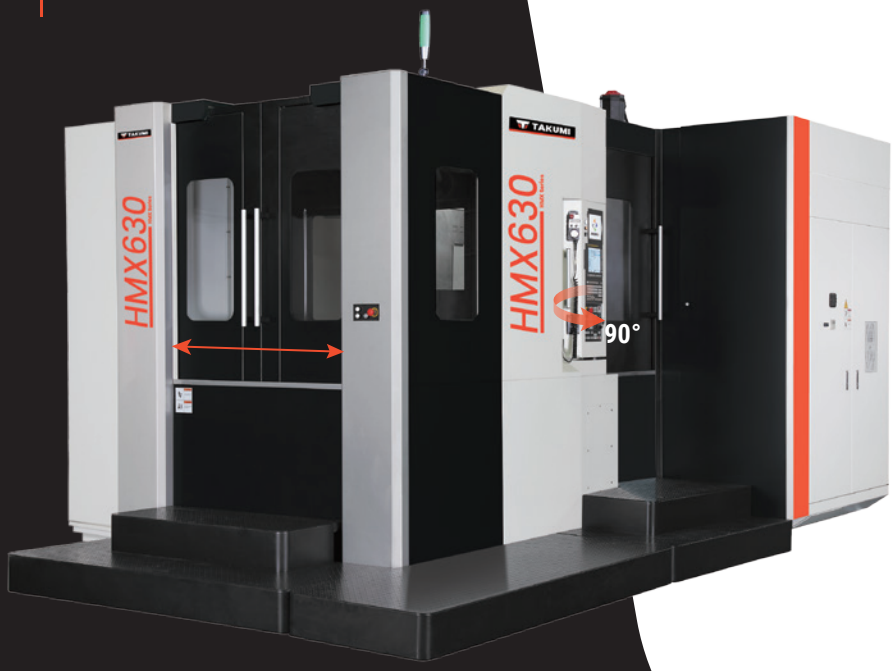

Optimal Ergonomic Design

Large door opening to the working area gives the operator impressive freedom and handling space.

HMX630 **1140** **mm** width of the door

Convenient Swivel Operation Panel

The operation panel can swivel 90° , and the height is designed from the operator's viewpoint.

06 HMX Series User Convenience

Powerful Shower Coolant

14 nozzles in the working envelope can flush the chips away perfectly.

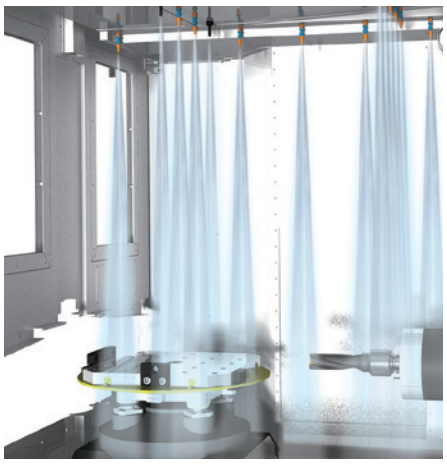

Effective Chip Removal Solutions

High pressure coolant through spindle and other chip removal solutions help wash away chips from hole drilling, tapping and other machining in the cavity. In addition, machining points can be cooled and extend the life of the tool.

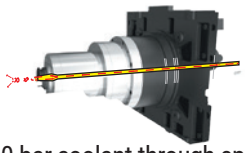

30 bar coolant through spindle



6 spindle coolant nozzles



Spindle air blast

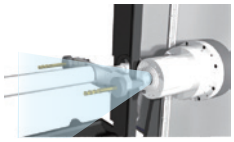

Spindle air blast (tool changing)

Minimum Interval Between Pallet and Operator

Perfect access distance and height to the working area facilitates faster set-up of workpieces and fixtures.

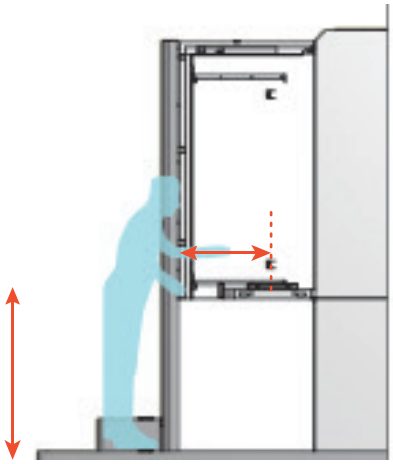

- **Distance to the center of the pallet:**
  610mm
- **Distance from floor surface to pallet surface:**
  1,340mm
- **Door opening:**
  1,140mm

Z-axis Central Chip Disposal

Chip removal efficiency is greatly enhanced thanks to the belt type chip conveyor which is located at center of the base.

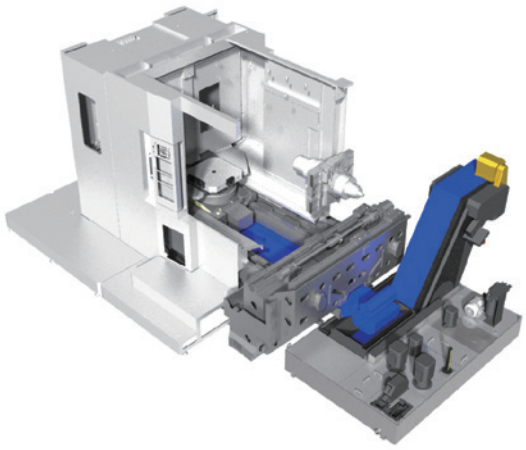

Flush Coolant System

It flushes all cutting chips towards the central chip disposal.

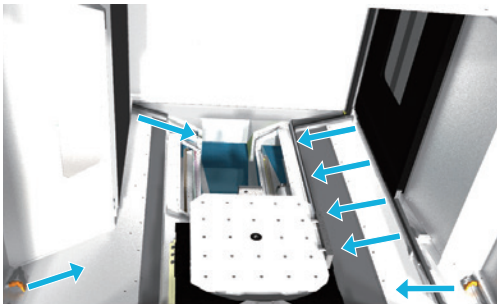

Table Dimension

Unit : mm [inch]

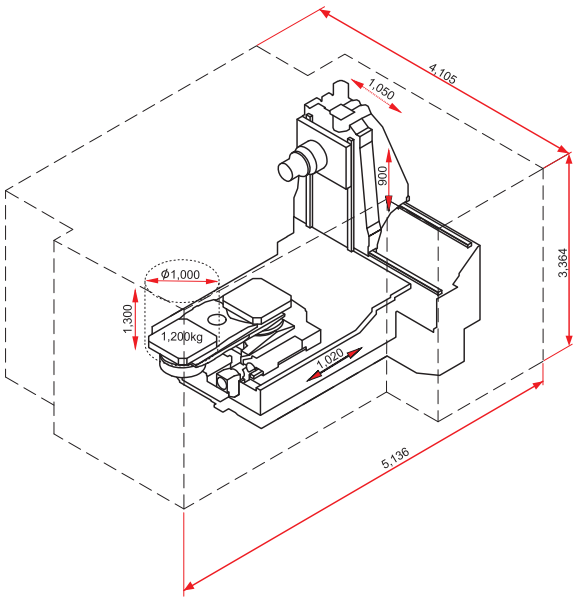

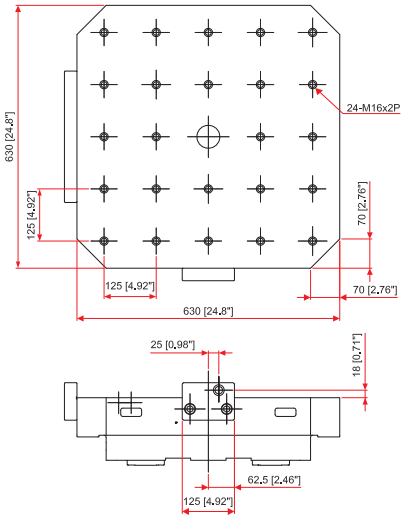

Working Area

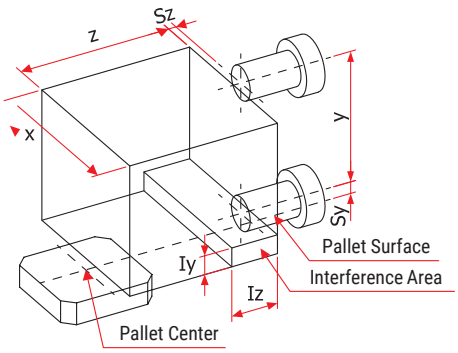

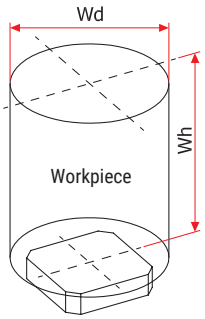

Item	Spindle	10,000rpm	8,000rpm
y	Y-axes Travel	900mm [35.4"]	880mm [34.6"]
x	X-axes Travel	1050mm [41.3"]	
z	Z-axes Travel	1020mm [40.2"]	
Sz	Spindle Nose to Pallet Center	50mm [2.0"]	
Sy	Spindle Center to Pallet Surface	80mm [3.1"]	100mm [3.9"]
Iy	Y-axes Interference	210mm [8.3"]	260mm [10.2"]
Iz	Z-axes Interference	315mm [12.4"]	
Wh	Max. Workpiece Height	1300mm [51.2"]	
Wd	Max. Workpiece Diameter	1000mm [39.4"]	

Tool Shank

Tool Restriction	BBT	CAT	DIN
Max. Tool Diameter	Φ115mm [4.53"]		
Max. Tool Length	600mm [23.62"]		
Max. Tool Weight	25kg [55lb]		
Max. Tool Diameter (no adjacent tools)	Φ300mm [11.81"]		
Pull Studs	JIS50P M24x3P	DIN 69872(UNC) 1"-8UNC	DIN69872 M24x3P

With adjacent tool(s)

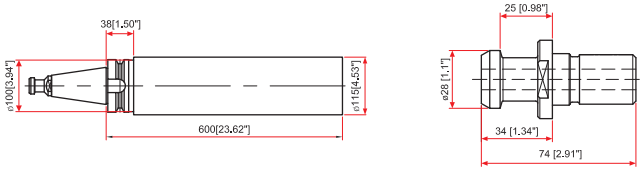

Without adjacent tool(s)

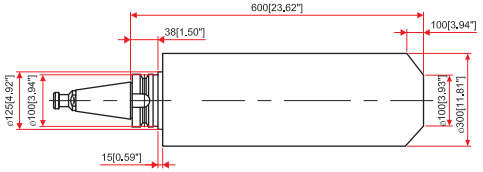

2 APC with 60 Tool ATC

Unit : mm [inch]

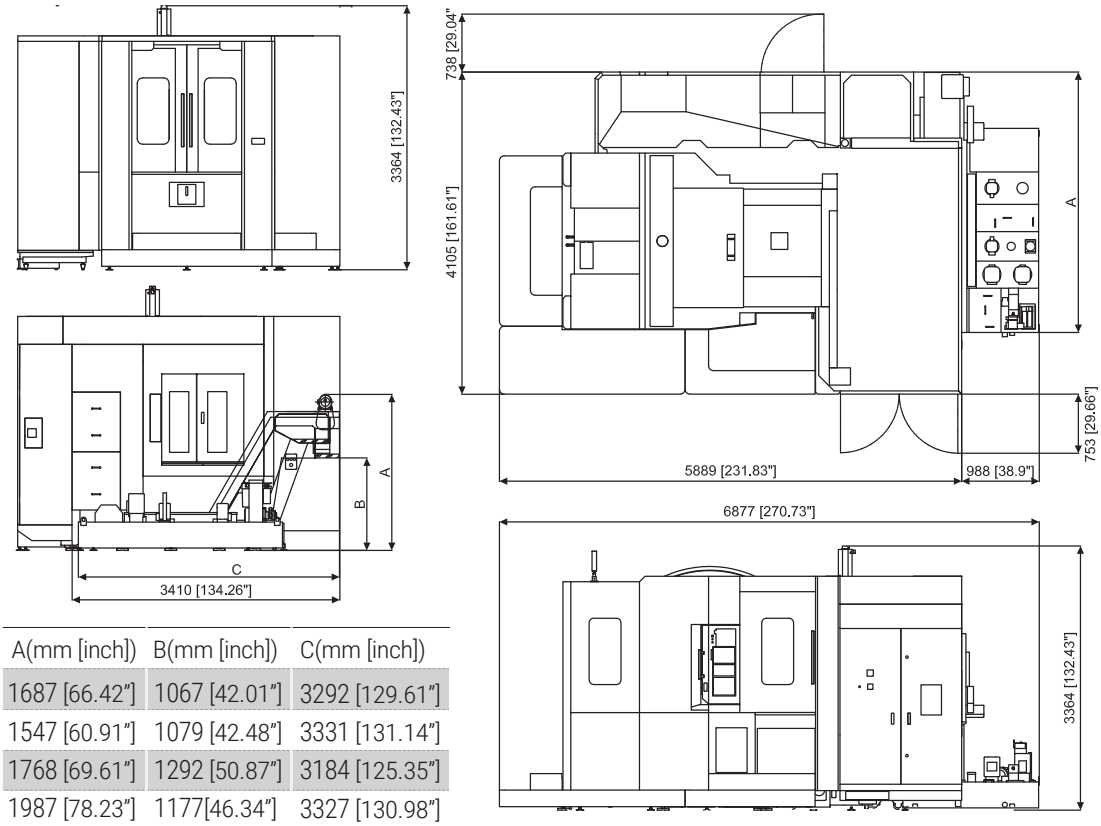

Chip conveyor type	A(mm [inch])	B(mm [inch])	C(mm [inch])
Scraper roller type	1687 [66.42"]	1067 [42.01"]	3292 [129.61"]
Steel belt type	1547 [60.91"]	1079 [42.48"]	3331 [131.14"]
Magnetic scraper type	1768 [69.61"]	1292 [50.87"]	3184 [125.35"]
Dual belt type	1987 [78.23"]	1177[46.34"]	3327 [130.98"]

A= Height of chip conveyor; B= Height of chip outlet; C= Width of coolant tank and chip conveyor

6 APC with 60 Tool ATC

Unit : mm [inch]

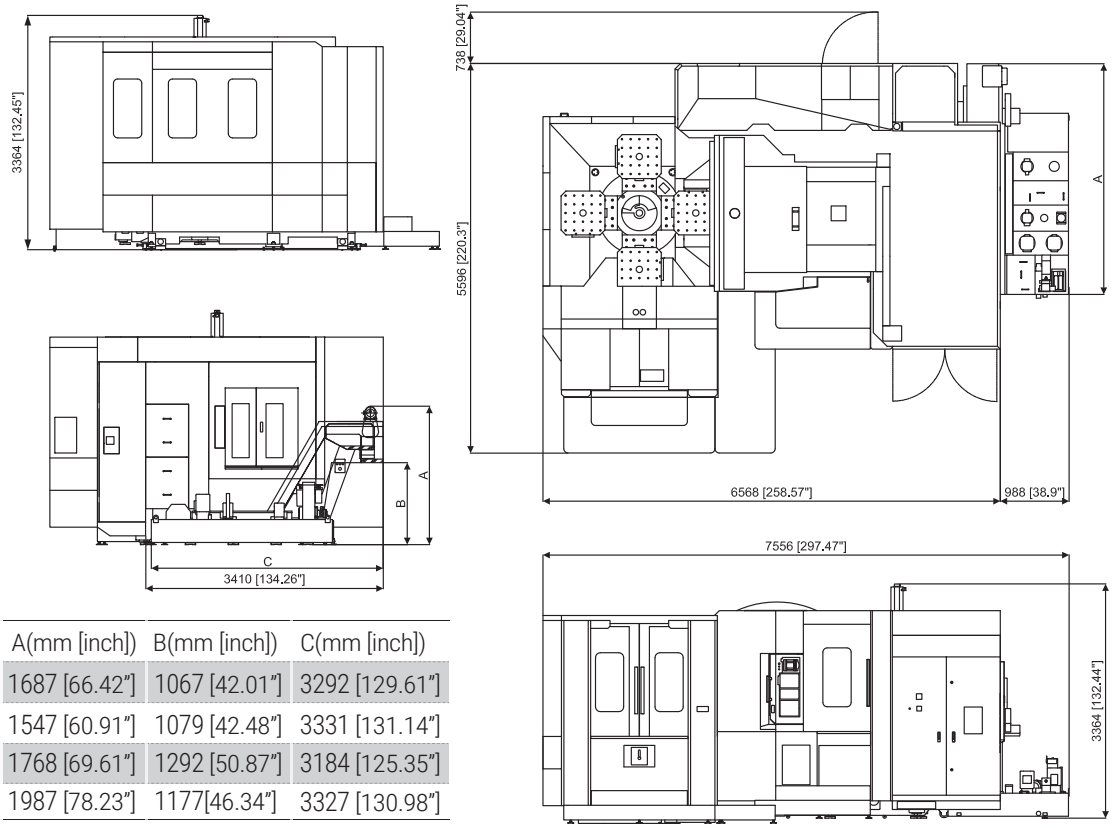

Chip conveyor type	A(mm [inch])	B(mm [inch])	C(mm [inch])
Scraper roller type	1687 [66.42"]	1067 [42.01"]	3292 [129.61"]
Steel belt type	1547 [60.91"]	1079 [42.48"]	3331 [131.14"]
Magnetic scraper type	1768 [69.61"]	1292 [50.87"]	3184 [125.35"]
Dual belt type	1987 [78.23"]	1177[46.34"]	3327 [130.98"]

A= Height of chip conveyor; B= Height of chip outlet; C= Width of coolant tank and chip conveyor

Machine Specification

Travel	HMX630
X/Y/Z-axis	1,050 / 900 / 1,020mm
Spindle center to pallet surface	80 - 980mm
Spindle nose to pallet center	50 - 1,070mm
Pallet top height (from the floor)	1,330mm

Table	
Table Size	630 x 630mm
Workpiece max. size	1,000mm x 1,300mm
Max. load	1,200kg
Configuration	M16 x 30L, P=125mm
Min. Indexing degree [OP]	1° [0.001°]
Indexing speed [OP]	2.2sec/90° [2.0sec/90°]
B-axis clamping torque	49,000Nm
Pallet clamping system	Mechanical Lock
Pallet clamping force	16kN x 4 cones

Spindle	
Spindle speed	20 ~ 10,000rpm
Spindle rated torque	600Nm (15% ED) / 420Nm (15 min.)
Spindle acceleration/deceleration	5.5sec
Spindle taper	ISO 7/24 Taper NT No. 50
Through spindle coolant	3.0Mpa

Feed	
Rapid feed (X/Y/Z)	50,000mm/min
Cutting feed (X/Y/Z)	1~50,000mm/min
Table rotating speed	Parkson: 16.6rpm / Tsudakoma: 22.2rpm
Guide ways (X/Y/Z)	Roller ways
Acceleration (X/Y/Z)	0.7G / 1.0G / 0.9G
Ballscrews size	Ø50mm

ATC	
Type of tool shank [OP]	BBT50 [CAT50]
Type of pull-stud [OP]	JIS [CAT50]
Number of tools	60
Max. tool diameter (Adjacent pots full/empty)	Ø115mm / Ø300mm
Max. tool length	600mm
Max. tool weight	25kg
Tool selection system	Random
Tool to tool	2.5sec [3.5sec, heavy tool]
Chip to Chip	5.8sec [6.8sec, heavy tool]

APC	
Number of pallets [OP]	2 [6]
Pallet change system	Rotation
APC exchange rotating time	15sec

Motors	
Spindle motor	45/37kW
Feed axes motors (X/Y/Z/B)	5.5/5.0/5.5/4.0kW
Lubrication pump motor	18W
Spindle coolant pump	1.62kW
Through spindle coolant pump	2.03kW
Chips flush (base) coolant pump	2.24kW
Overhead shower flush coolant pump	2.35kW
Hydraulic pump	2.23kW
Spindle oil chiller	5.40kW

Supply	
Electric voltage	200 ~ 230V
Electric power supply	70kVA
Air pressure	0.6Mpa
Air volume	660L/min

Tank	
Hydraulic unit tank	60L
Lubrication unit tank	3.0L
Coolant tank	1,000L

Size	
Machine dimension (L×W×H)	6,877 x 4,105 x 3,364mm
Required floor space (L×W×H)	7,677 x 5,595 x 3,364mm
Machine weight	18,200kg

Standard & Optional

● : Standard ○ : Option × : Non Applicable

Spindle		HMX630
10,000rpm		●
8,000rpm		○

ATC		
ATC Extention	60T	●
	120T	○
Tool Shank Type	BBT50	●
	CAT50	○

Table, APC & Pallet		
APC	2 APC	●
	6 APC	○
Pallet Size	630mm x 630mm	●
B Axis Table	1°	●
	0.001°	○

Coolant System		
Spindle Through Coolant	30bar	●
	70bar	○
Spindle Air Blast		●
Spindle Thermal Compensation		●
Cutting Air Blast		●
Coolant Shower (14 Nozzles)		●
Chiller for Coolant Tank		○

Chip Disposal		
Chip conveyor	Steel Belt Type	○
	Scraper Type	●
	Magnetic Scraper Type	○
	Dual Belt Roller Type	○
Coolant Tank		●
Full Chip Enclosure		●
Enclosed Guideway Covers		●
Dual Chip Augers		●

Feed Axes	
Linear Scales (X/Y/Z/B)	○

Electric Device	
3-Color Signal light	●
Working Light	●
Sealed Electric Cabinet	●
Heat Exchanger for Electric Cabinet	●
A/C for Heat Exchanger of Electric	○

Measuring Device	
Coolant Tank Detection	●
Laser Tool Measurement	○
Tool Breakage Detection	○
Workpiece Measurement	○
Tool Measurement	○

Environment	
Oil Skimmer	●
Oil Mist Collector	○

Fixture & Automation	
Hydraulic Overhead Arms for Fixtures	○
Air Sealing Detection for Fixture	○
Hydraulic Thru Pallet for Fixtures	○
Additional Hydraulic Thru Pallet	○
Automatic Pallet Indexing at Loading Zone	○

Safety Device	
Safety Door	●

Control	
Fanuc 0iF-Plus (15" Color LCD with iHMI)	●

ETC	
Leveling Block and Screws	●
Maintenance Tools	●
Manuals	●
Window Spinner	○
Automatic power on/off and warm-up within 7 days	●
CE Certified	○

TAKUMI

